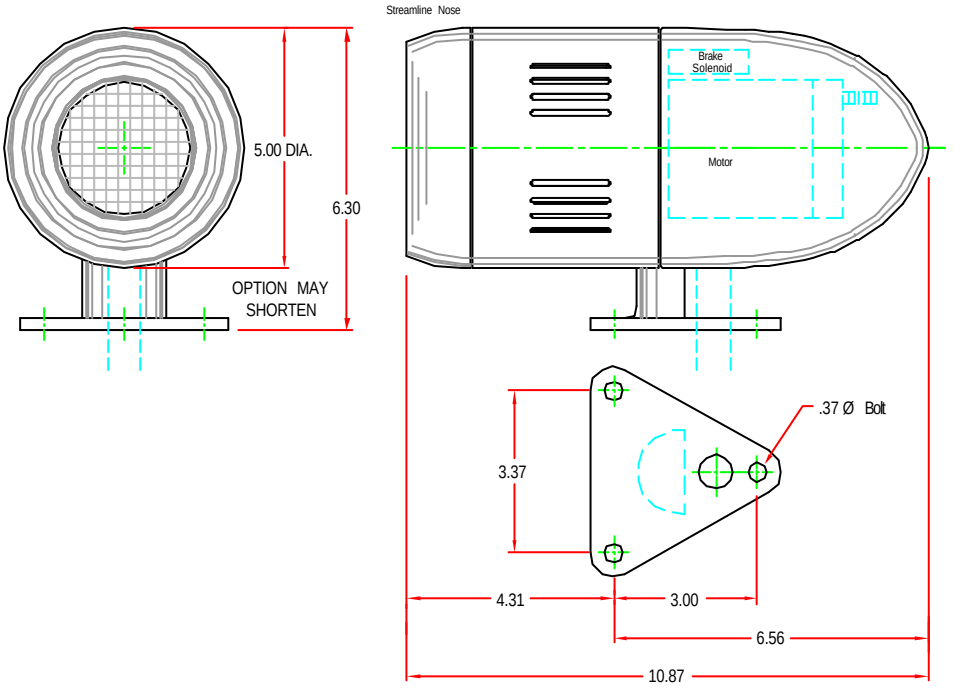

NOTE:

MAGNETIC RELAY MOUNTED REMOTE

PROPRIETY NOTICE:

[redacted]

TIMBER WOLF™ SIRENS

KENYON DESIGN | MAY 5, 2002

TIMBERWOLF SIREN

SAN BERNARDINO, CALIFORNIA

45 STREAMLINE PEDESTAL MOUNT

45-t6-m2-c2-f2-a2-a8